A Good Solid State Phono Amplifier?

Les Carpenter G4CNH - 2012

Well I like to think that if Heineken designed an RIAA Phono Amplifier then it would be something like this!

Having serviced a wide range of solid state Hi-Fi amplifiers from Quad to NAD, I was always disappointed in the way their respective phono amplifier stages operated. They all seemed to run out of steam at the low frequency end when a +20dB boost was required at around 200Hz. The gain stopped increasing much above +10 dB though some actually made +15dB. On each occasion the sine wave output was seen to flatten off both on positive and negative excursions. Researching various manufacturers circuit diagrams it became clear to me that all of their later circuits had their phono stage supply rails lifted from the usual +/-12V to +/-15V, some even going higher to +/-18V supplies. This necessitated a change in their design whereupon all that the manufacturers did was to choose a type of operational amplifier capable of working with higher supplies and going for something like +/-20V. Was this the answer to the poor bottom end performance? Well it seemed to be as it gave sufficient headroom for the lower RIAA specification to be achieved without limiting, provided the input was kept below 100mV. This seemed to be the key as without the higher supply the amplifiers bottomed out with an input, in some instances, of just a few mV!

I was also seeking a design that had a buffer amplifier; after all it was not known what type of inputs the phono amplifier would have to feed so a Buffer stage would hopefully prevent the RIAA characteristics from being upset by this.

Taking the very best of the circuits I had panned, I added some tweaks to their design and above all, fitted high quality components in the places that mattered even though it was an expensive option. Some of the small value capacitors with the tolerance and stability I was looking for cost £1 each. But the end results proved it to be a worthwhile investment.

No circuit board exists for the final design, everything is built on Strip board and the first unit performed exceptionally well with very little changes to circuit values to get an acceptable performance. Is it repeatable? Well so far three units have been constructed and all give admirable results. One thing I can guarantee is that if the strip board cuts are correctly made in the right places, the components are fitted exactly where they should go without any copper or solder bridges, then it will work as planned. Could you build it? If you are good with a soldering iron then yes! After all, I can do it with my pensioner eyesight and hand shake!

I added an optional EQ circuit so that you can adjust the output to suit your hearing. Why? Well some people think the amplifier is too accurate, it gives you the lot, everything it can find in the groove via the cartridge of course, including the scratches! The EQ can be switched in or out and mellows the unit to sound like a good valve phono amplifier. In fact the EQ circuit has little effect on the RIAA characteristic with the Treble and Bass boost controls at central position. Turning the controls to maximum gives a 6dB boost at the lower end and a 4dB boost at the higher end of the RIAA response curves.

It is most important to use fully isolated RCA jacks on the input as those, with screens grounded to the turntable ground, may introduce a hum loop.

The basic circuit without the optional EQ.

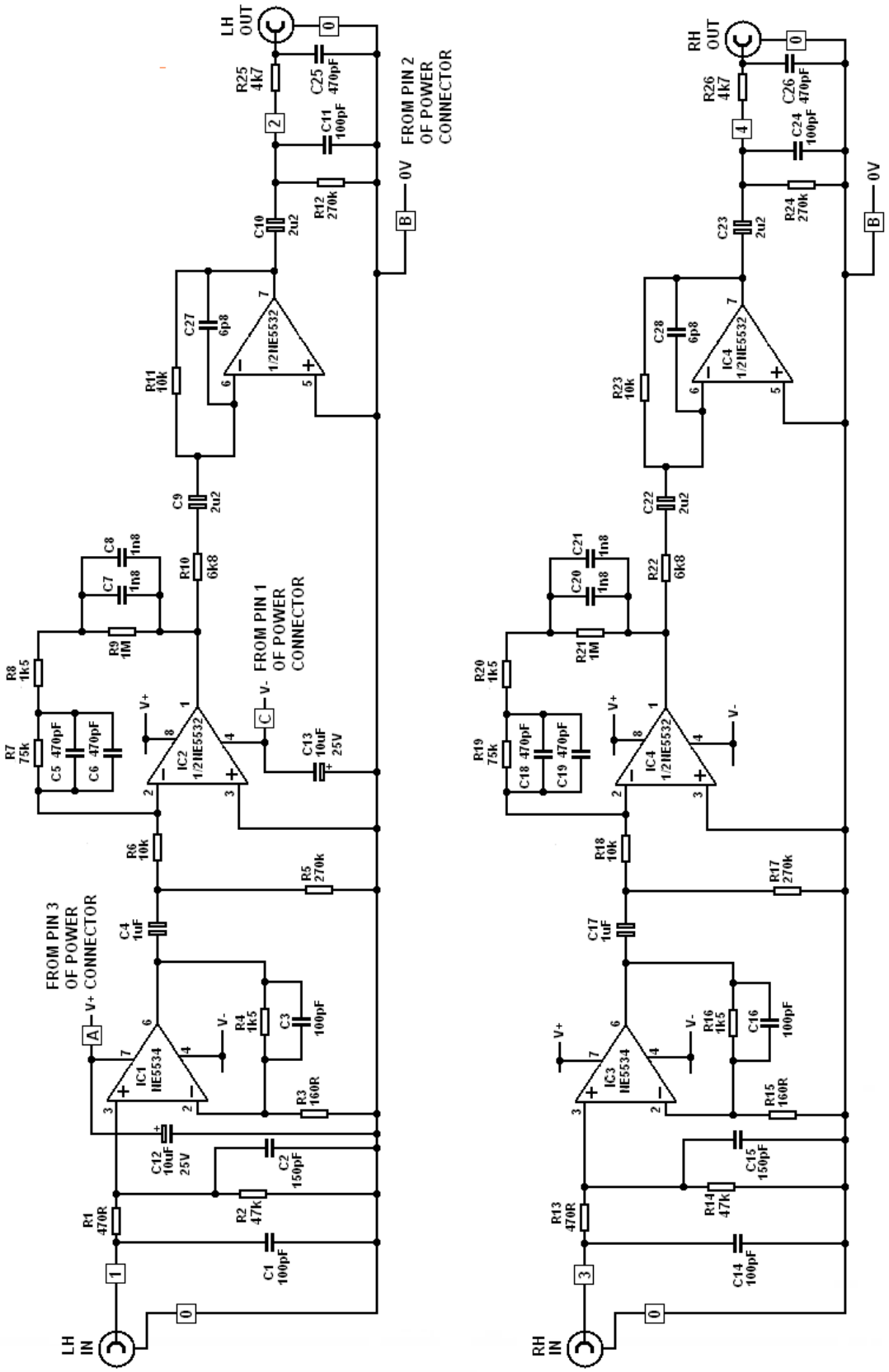

The basic Strip Board

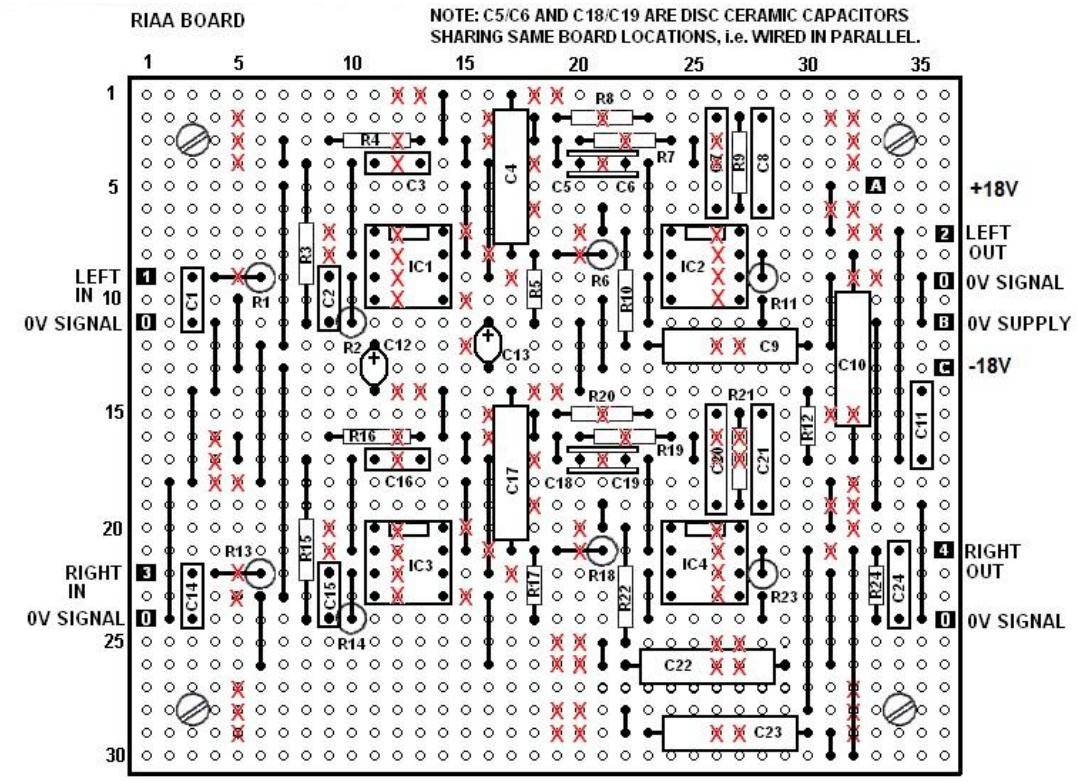

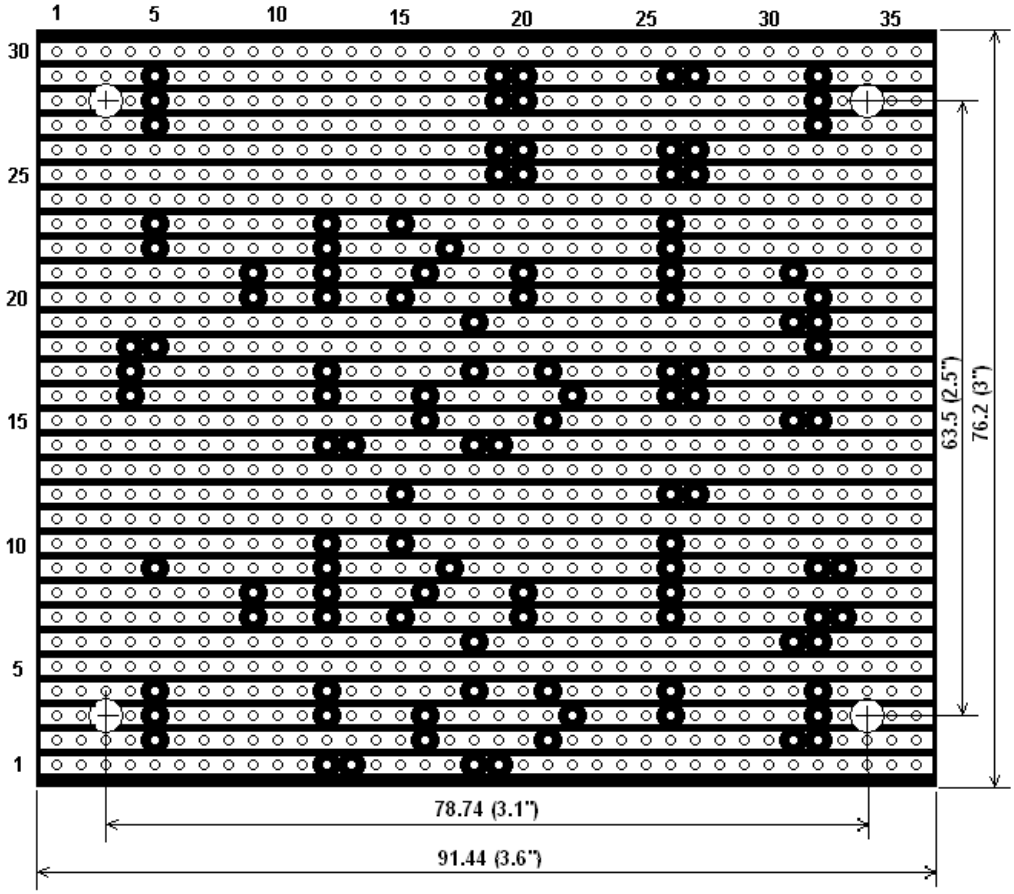

Power supply.

Forget all the rubbish written about 3-terminal regulators being too noisy for phono amplifier applications. They are perfectly acceptable and besides if they did generate any high frequency noise then:-

a) It will be too low in amplitude, too high in frequency for you to hear, will not affect the RIAA and will mostly be removed by the filtering.

b) Any high frequency noise will be way out of ones hearing range; even a bat would probably not hear it!

I used the following circuit and well, it works!

And yes, no close up decoupling caps near the regulators as the smoothing components are close enough to do the job without causing any oscillations.

A small 6VA 20-0-20 transformer is sufficient for the very low current consumption. All the crap I read on other sites about using the biggest VA rating like 50VA or even 100VA makes me laugh. The power supply is driving circuits of relatively high impedance not thumping heavy currents through loud speakers.

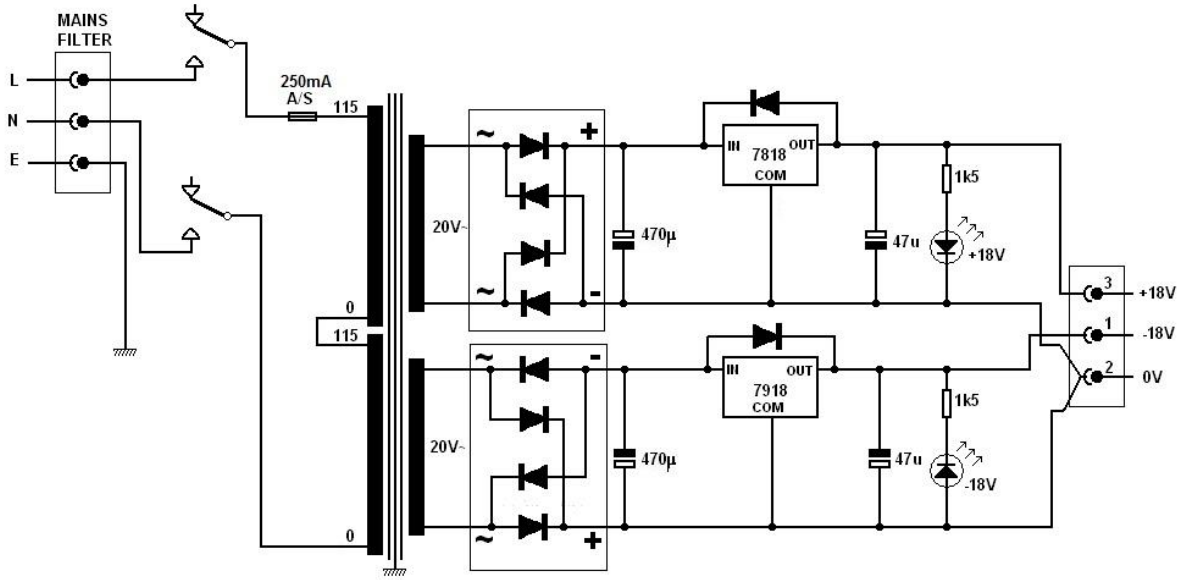

A standard 20 way tag board is used in the construction, the power dissipation is so small that no heat sinks are required for the regulators. Their minimum load requirement is provided by the LED indicators.

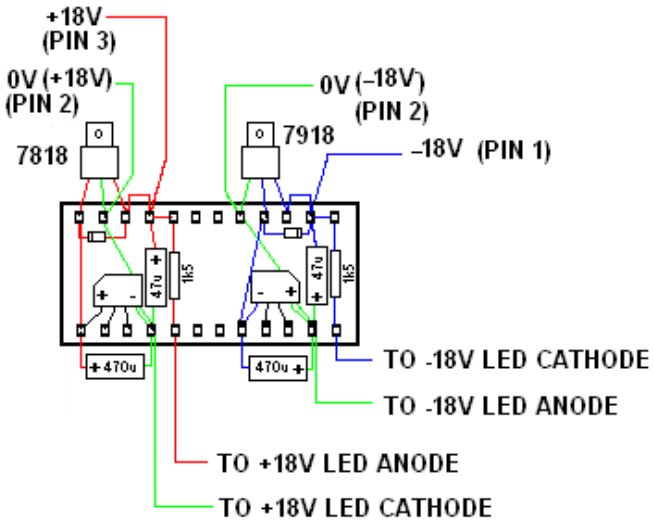

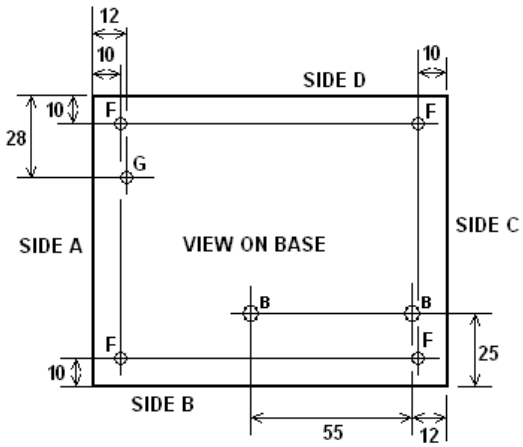

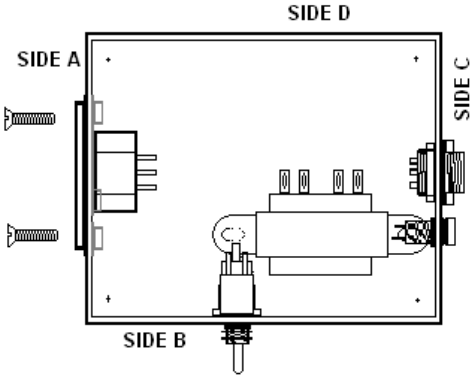

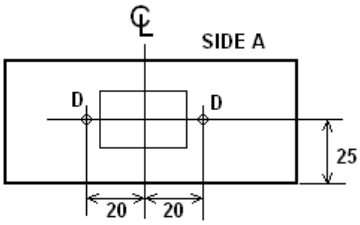

HOLE CUT OUT 30 x 20mm
D = 3mm Clearance

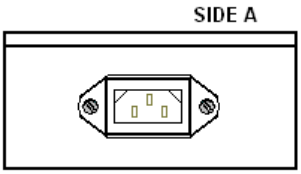

BOX TYPE RS 528-7173
HAMMOND 1590CBK
120 x 94 x 52.5mm

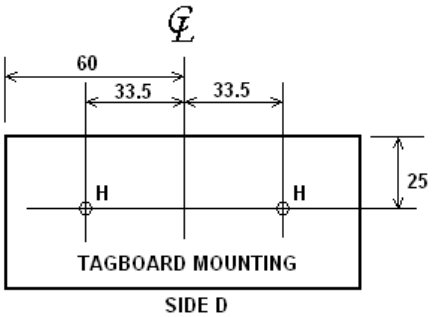

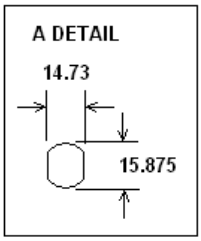

B = 4mm Clearance
Countersunk on box outside

C = 6mm Clearance

D = 3mm Clearance

E = 12.5mm

F = 3.5mm Clearance

G = 5mm Clearance Countersunk
on box outside

H = 3mm Clearance
Countersunk on box outside

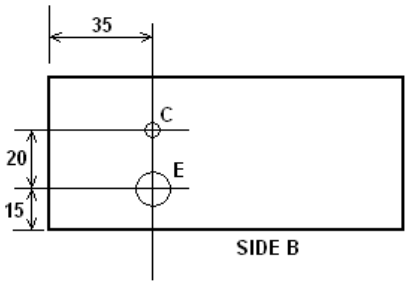

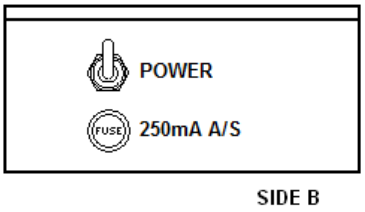

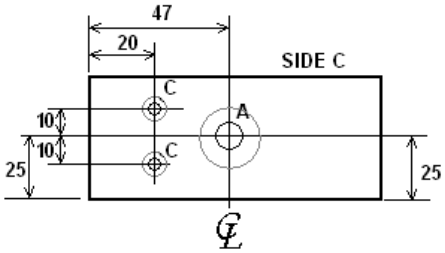

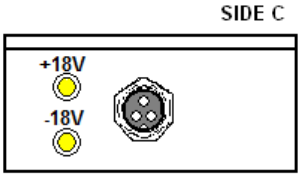

You will also read on other websites about how important it is to keep the mains transformer in a separate box and yet they place the main smoothing components within the phono amplifier box. This is bad because the ripple current from the smoothing capacitors is being run down the supply cable.
Better to keep all the smoothing and regulation in one box with a reasonable length of power cable for isolation. The PSU Box really does have to be kept away from the Phono Amplifier box to give you absolutely no hum.

The inter-connecting cable, this uses the 3 pin version of the type of plugs and sockets used for microphones on CB transceivers.

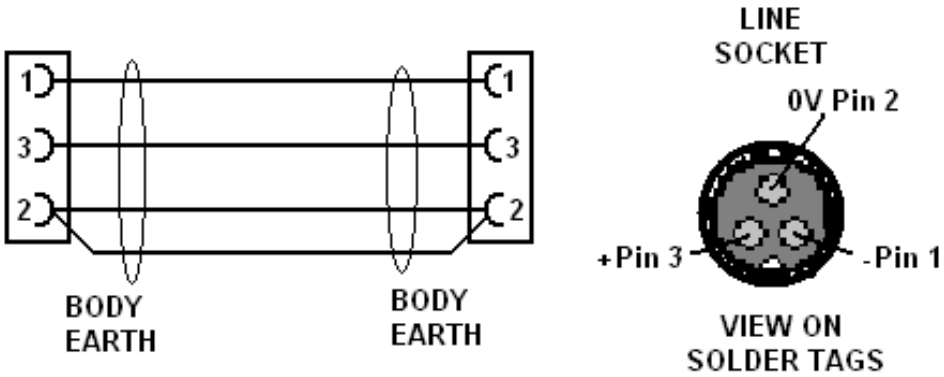

As mentioned earlier, keeping the PSU away from the phono amplifier is more important than anything else regarding hum and noise, the main problem is hum pick up from the transformer. At least the supply is regulated and smoothed before entering the phono amplifier enclosure; the last thing one wants is un-smoothed supplies causing high ripple currents down the interconnecting lead, as found on some other designs.

Photo of earlier prototype using a box that was difficult to work with and also I trialled a mains input filter.

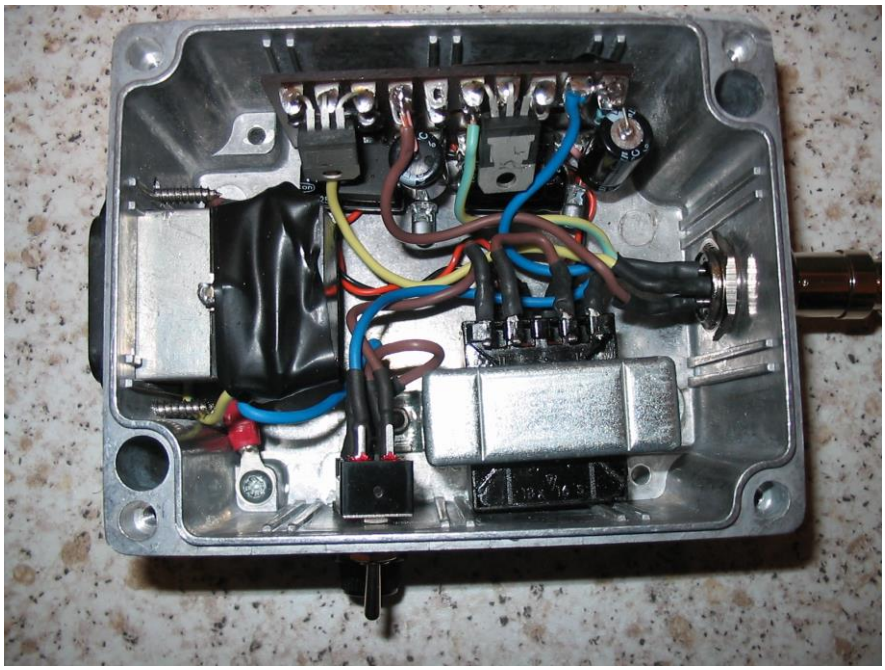

PHOTOS OF EARLIER NON EQ PHONO BOARD FITTED INSIDE A HAMMOND STOMPBOX.

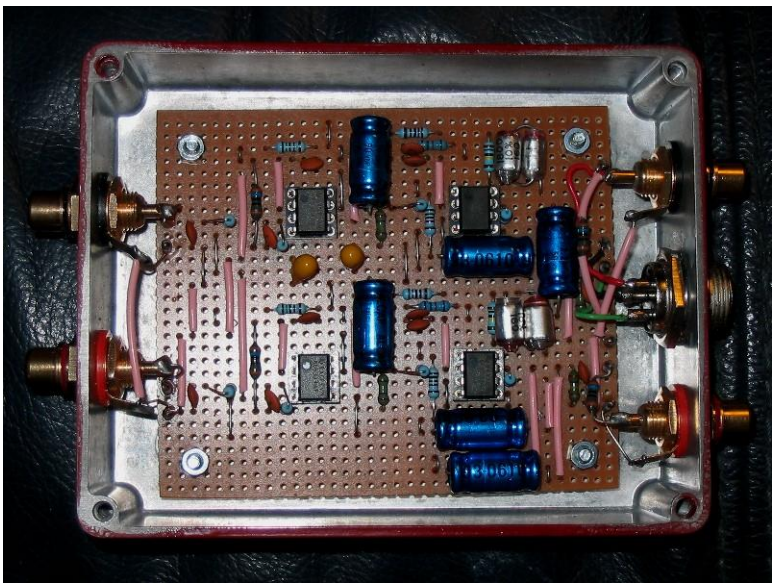

Going EQ.

I decided to try modifying the last op-amp stage from a straight buffer to being capable of altering the RIAA response curve. However this must work without affecting the excellent characteristics already obtained. Of course you don't have to fit the EQ circuit if you don't want it; the new board layout is designed so that the EQ can be added later if desired.
I have tried it and love it to bits! As mentioned earlier, its effect on the RIAA curve is hardly discernable with controls at mid-point but I have included an IN/OUT switch so you really have nothing to lose by building this later version. I must point out though that your main amplifier should have its volume turned down before operating the EQ switch as its operation does generate a loud thumping click. This is a small price to pay though for such a versatile piece of equipment.

The board is basically the same but with a few option pins. These pins I have coloured for identification purposes and they match the termination points of the proposed add on circuit.

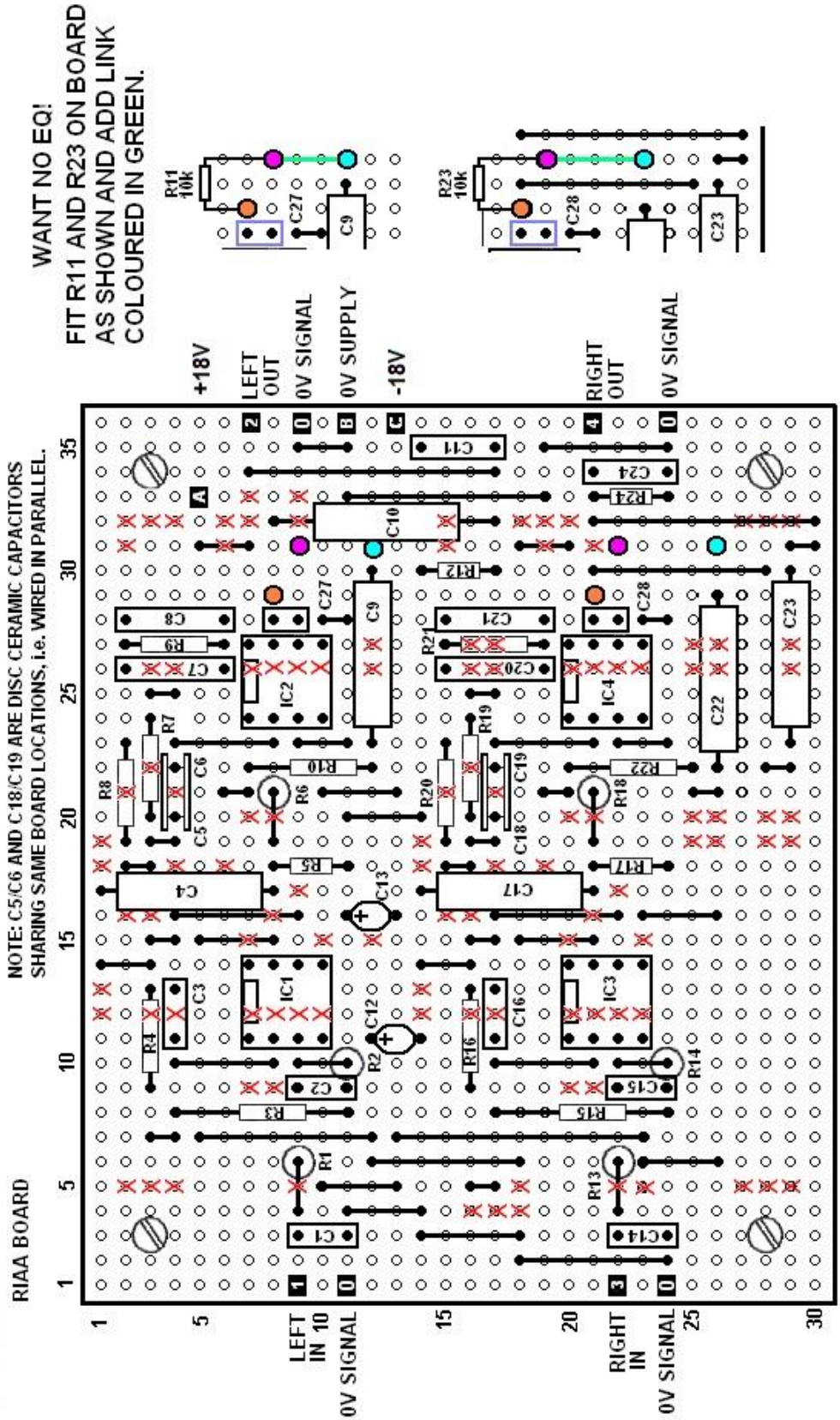

The revised circuit.

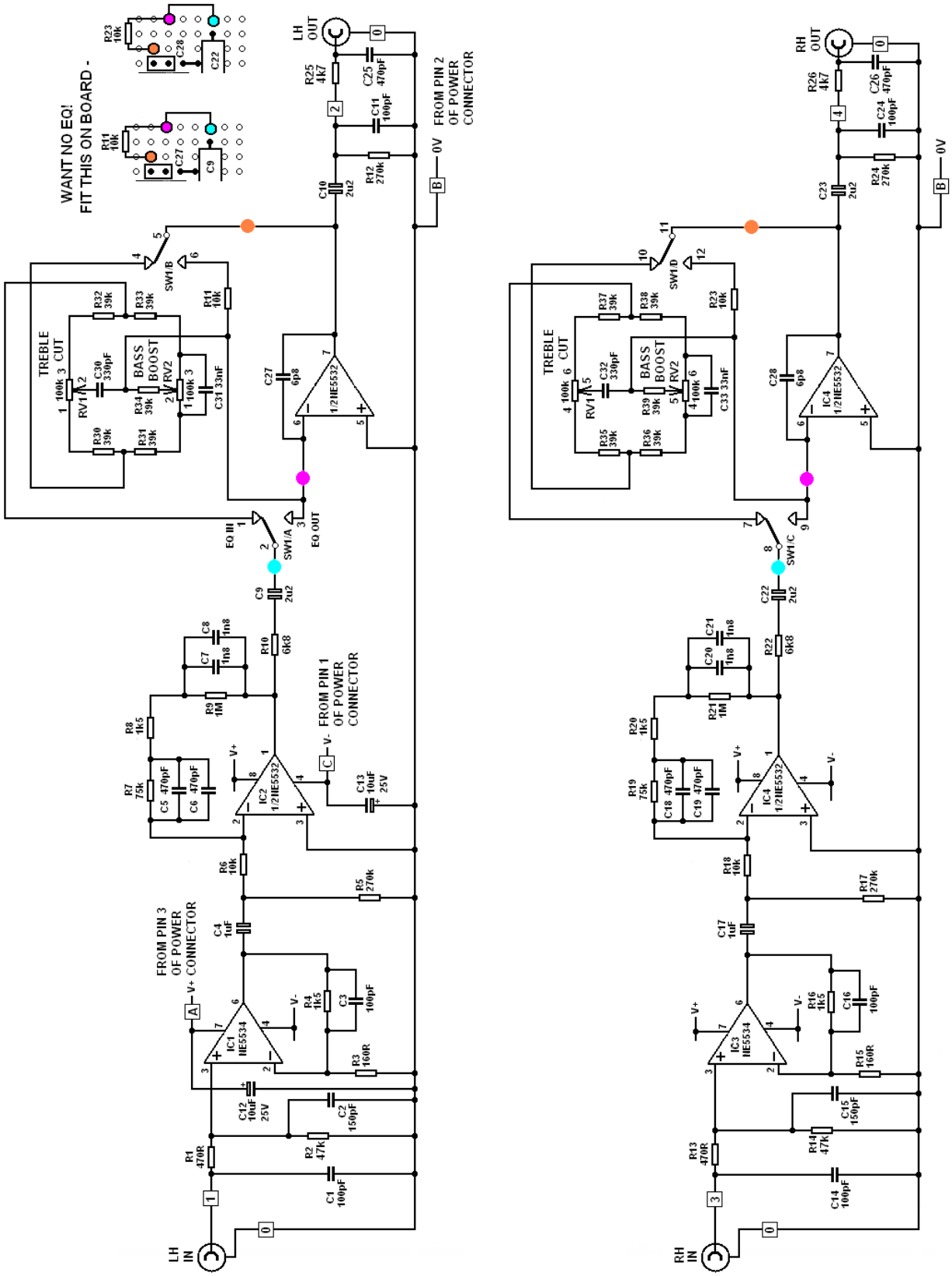

The EQ Assembly

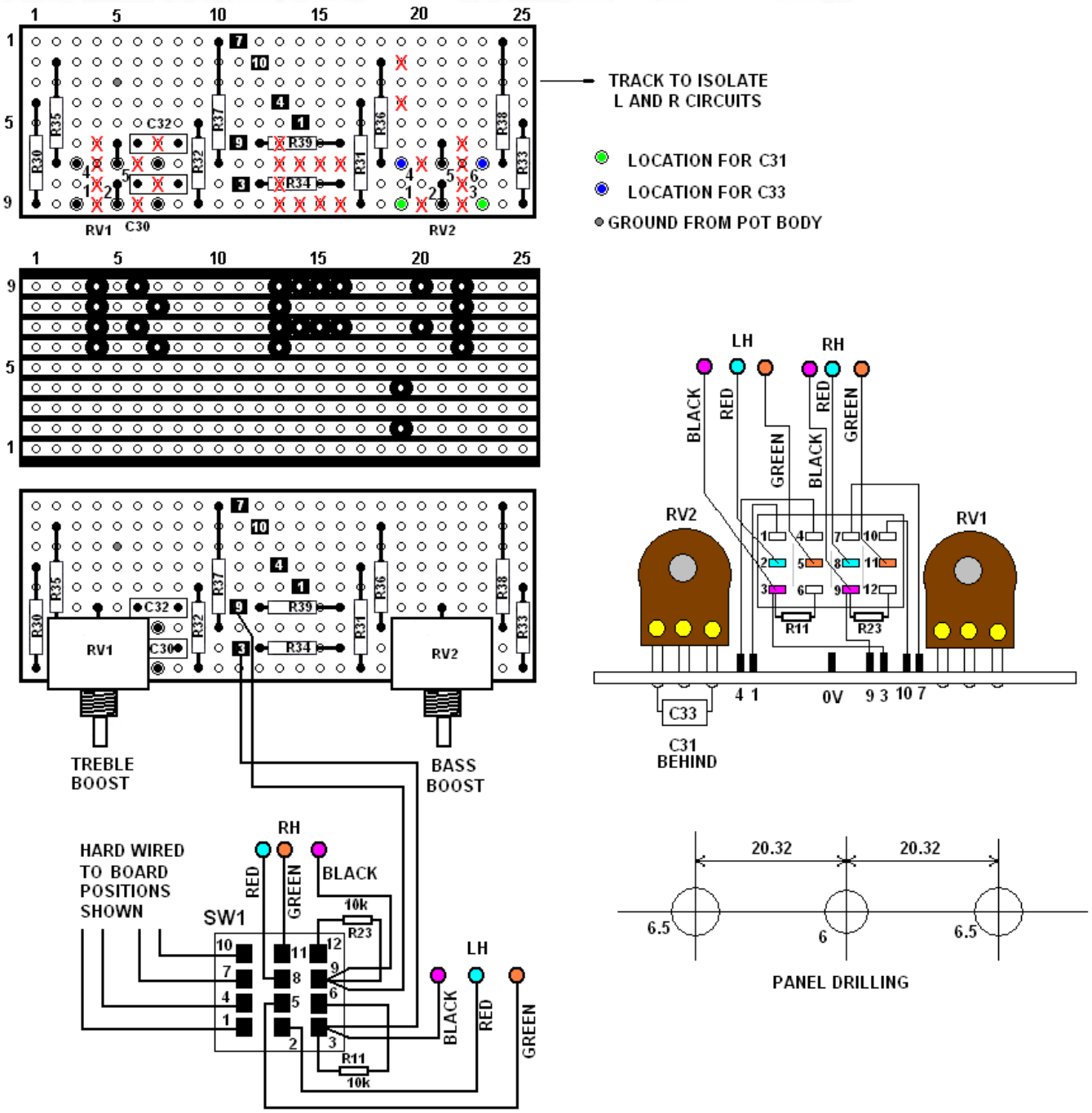

I used coloured wire (Red, Green and Black) to aid in the correct termination of EQ board to main board. I manufactured a simple jig to hold the pots and switch together whilst wiring them up, the pots should be mounted onto the board before wiring begins,.

For the love of me I cannot remember if any more track cuts were necessary or indeed carried out. Just in case here is another view of the track side recorded at a later date.

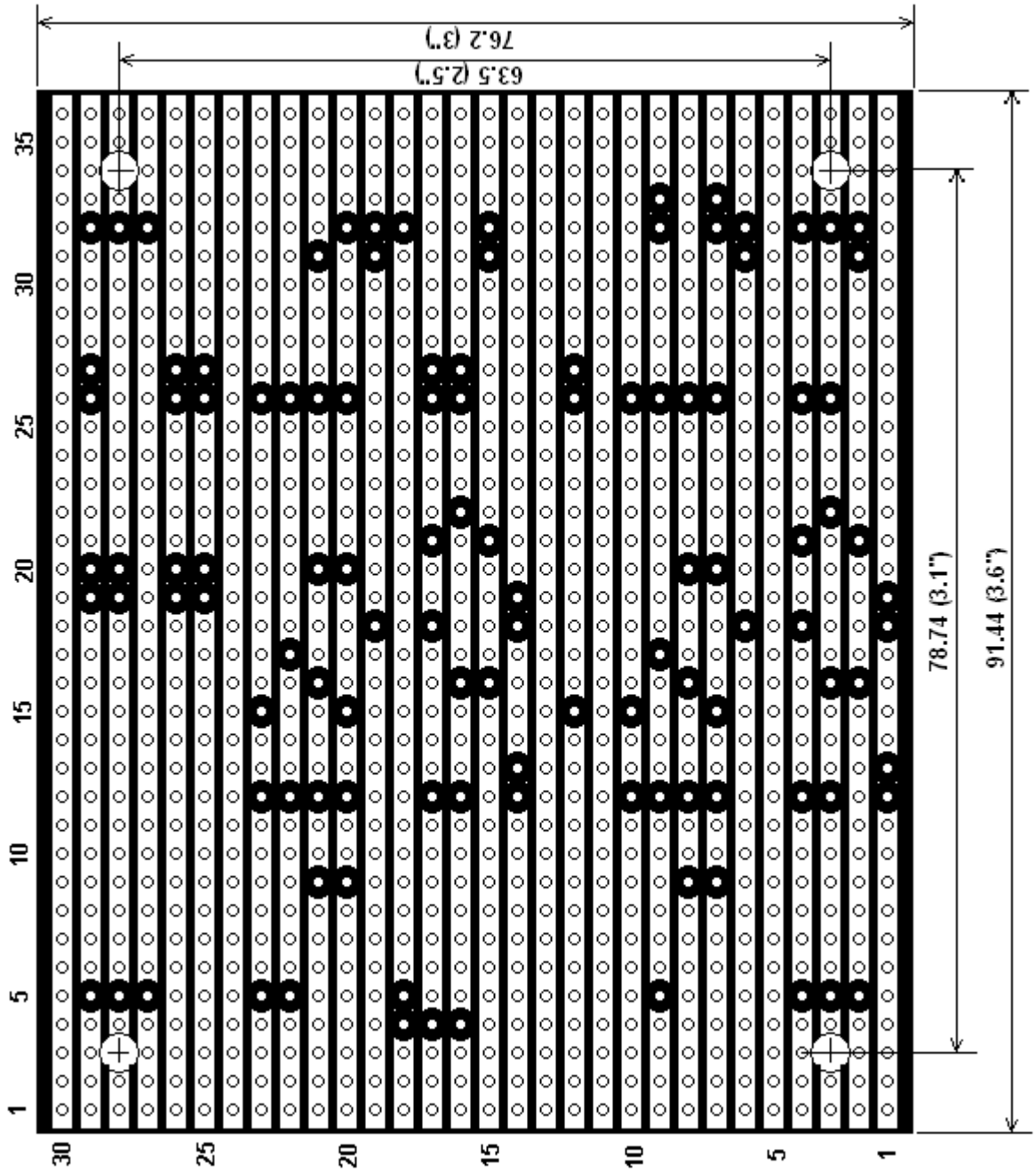

Some more photos.

EQ Board

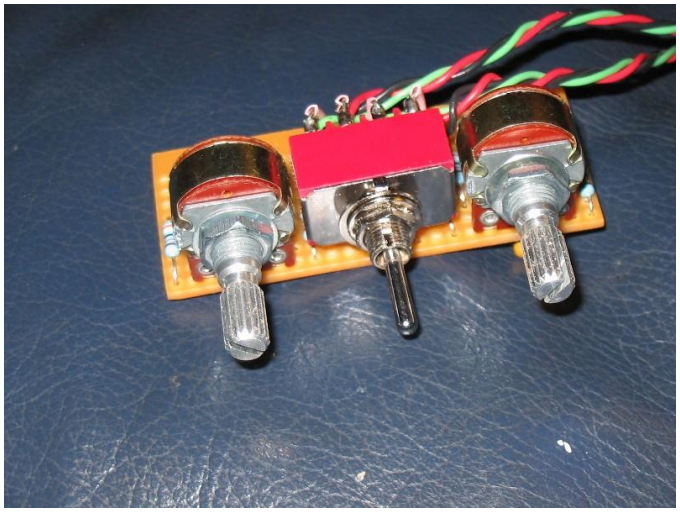

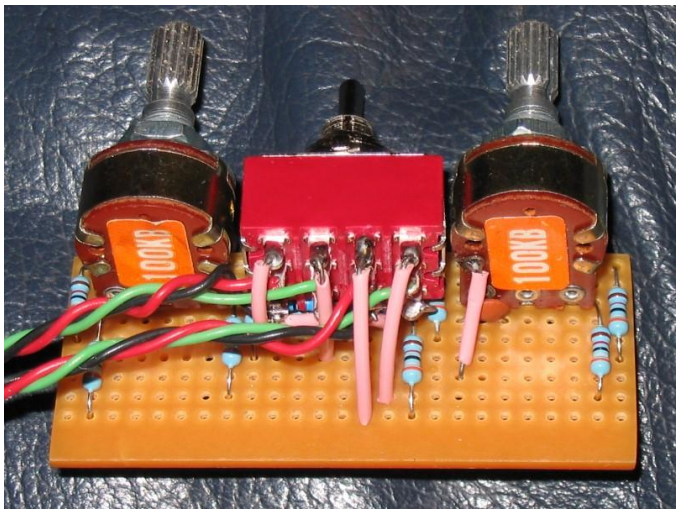

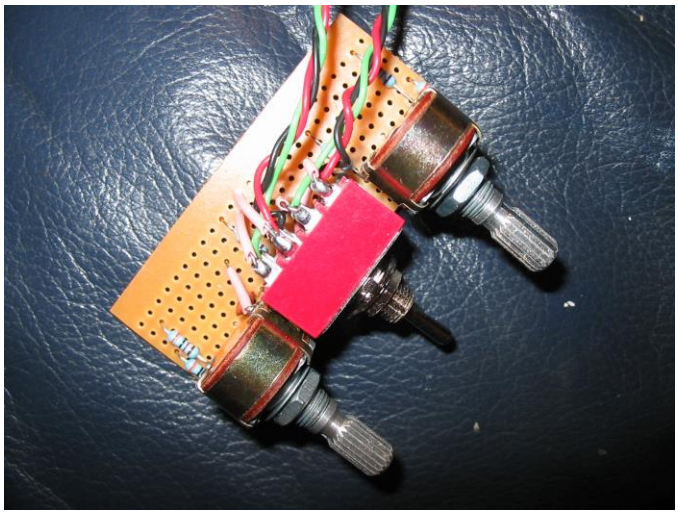

Internal View of RIAA Box with EQ installed.

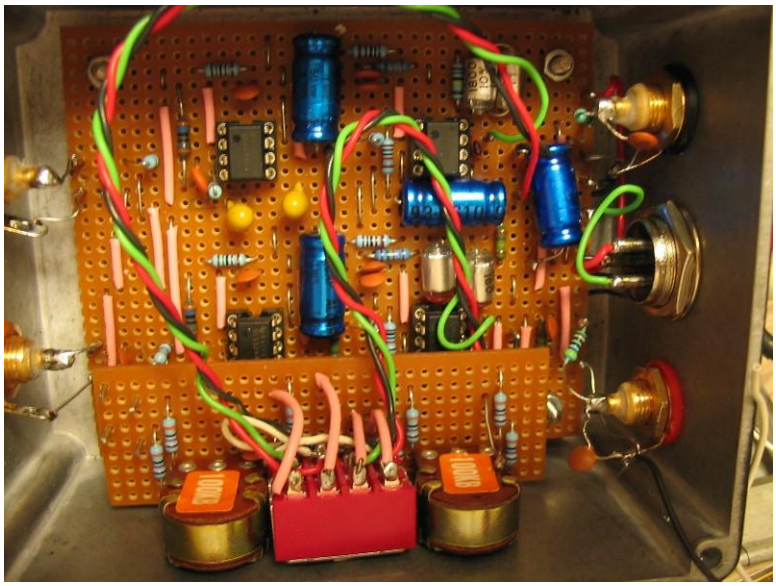

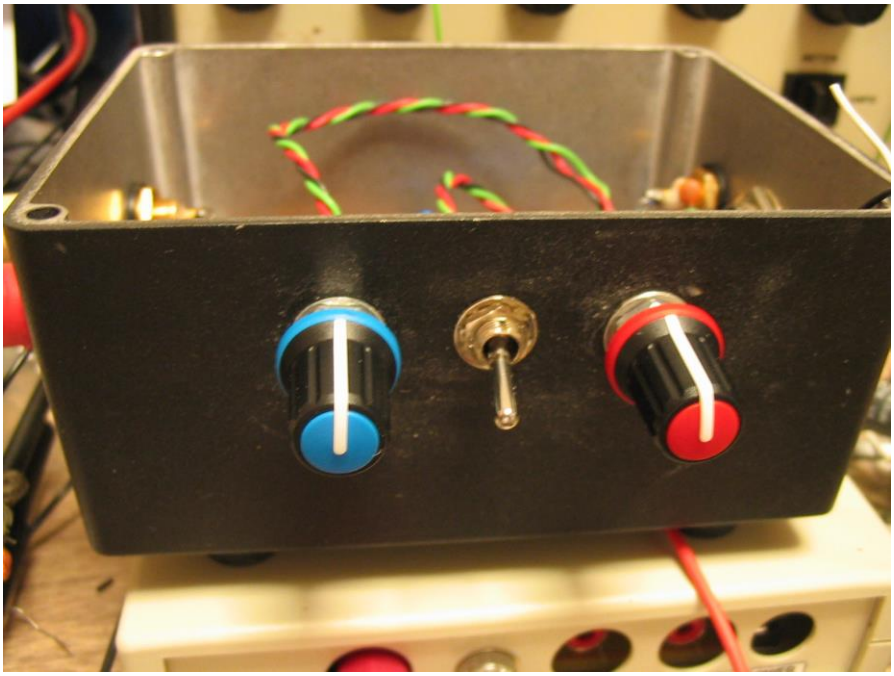

Drill and Assembly

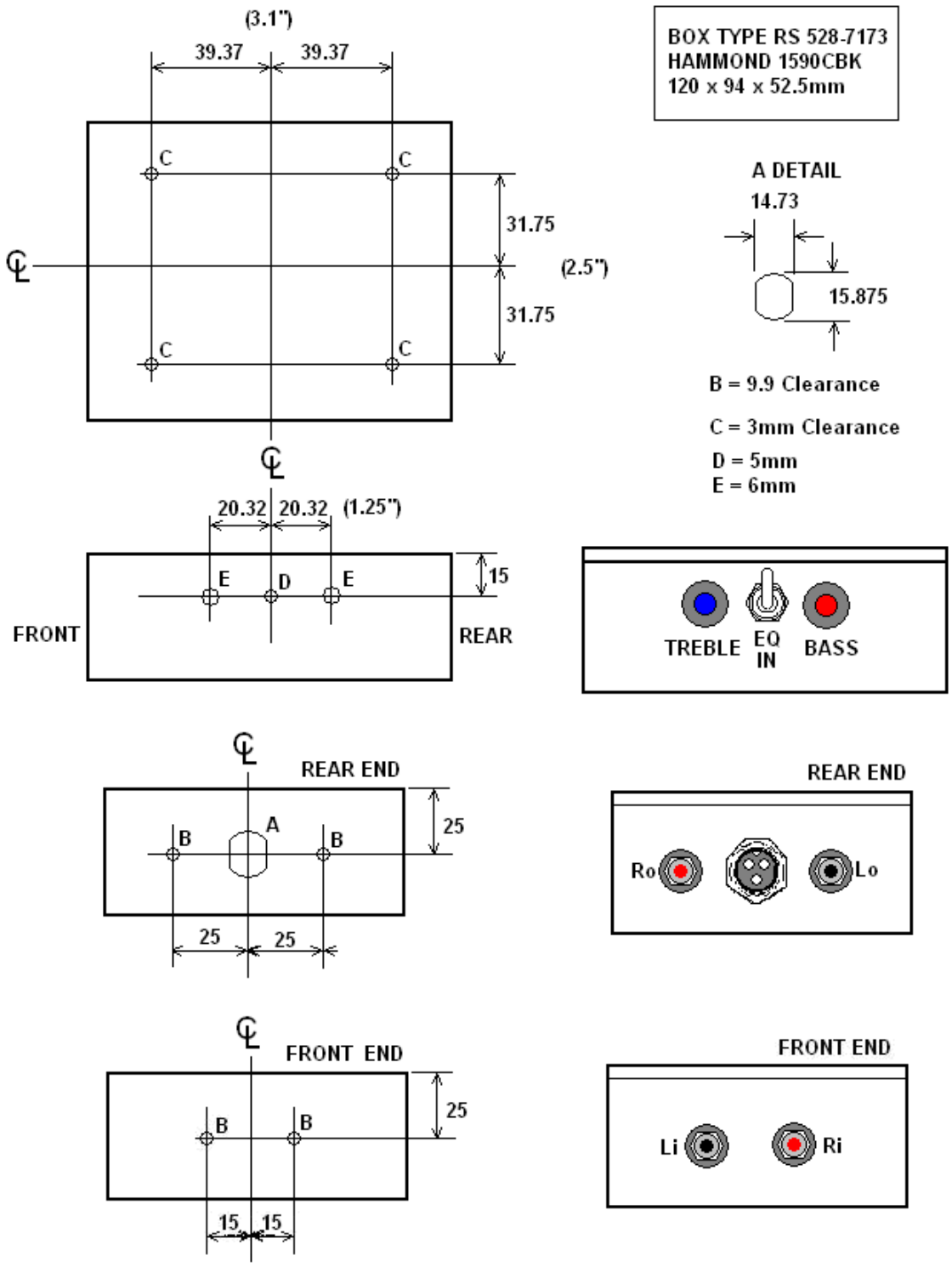

Typical Plot of characteristic.

FREQ (Hz)	RIAA (dB)	LEFT (dB)	RIGHT (dB)
20	19.3	19.00	19.00
30	18.6	18.50	18.50
40	17.8	17.50	17.50
50	17.0	16.80	16.80
60	16.1	16.00	16.00
80	14.5	14.40	14.40
100	13.1	13.00	13.00
150	10.3	10.20	10.30
200	8.2	8.00	8.20
300	5.5	5.40	5.20
400	3.8	3.60	3.60
500	2.6	2.40	2.40
800	0.7	0.70	0.70
1000	0.0	0.00	0.00
1500	-1.4	-1.40	-1.40
2000	-2.6	-2.50	-2.60
3000	-4.8	-4.40	-4.60
4000	-6.6	-6.20	-6.40
5000	-8.2	-8.00	-8.10
6000	-9.6	-9.40	-9.60
8000	-11.9	-11.70	-11.80
10000	-13.7	-13.40	-13.70
15000	-17.2	-17.00	-17.30
20000	-19.6	-19.60	-19.8

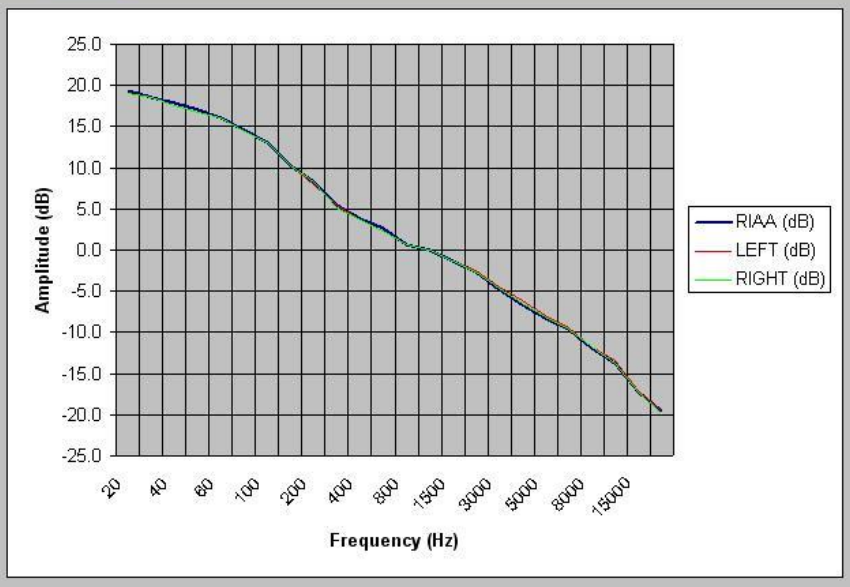

GAIN

INPUT REQUIRED AT 1kHz for 0dB OUT

Left Channel	minus 40.4dB
Right Channel	minus 40.4dB

EQ characteristic with both pots at maximum. Left channel only shown but later tests showed that the Right Channel was exactly the same.

FREQ (Hz)	RIAA (dB)	LEFT (dB)	RIGHT (dB)
20	19.3	25.00	
30	18.6	25.00	
40	17.8	24.50	
50	17.0	23.50	
60	16.1	22.00	
80	14.5	19.60	
100	13.1	17.40	
150	10.3	13.00	
200	8.2	10.00	
300	5.5	6.20	
400	3.8	4.00	
500	2.6	2.50	
800	0.7	0.70	
1000	0.0	0.00	
1500	-1.4	-1.40	
2000	-2.6	-2.20	
3000	-4.8	-3.60	
4000	-6.6	-5.00	
5000	-8.2	-6.00	
6000	-9.6	-7.00	
8000	-11.9	-8.50	
10000	-13.7	-10.00	
15000	-17.2	-13.00	
20000	-19.6	-15.50